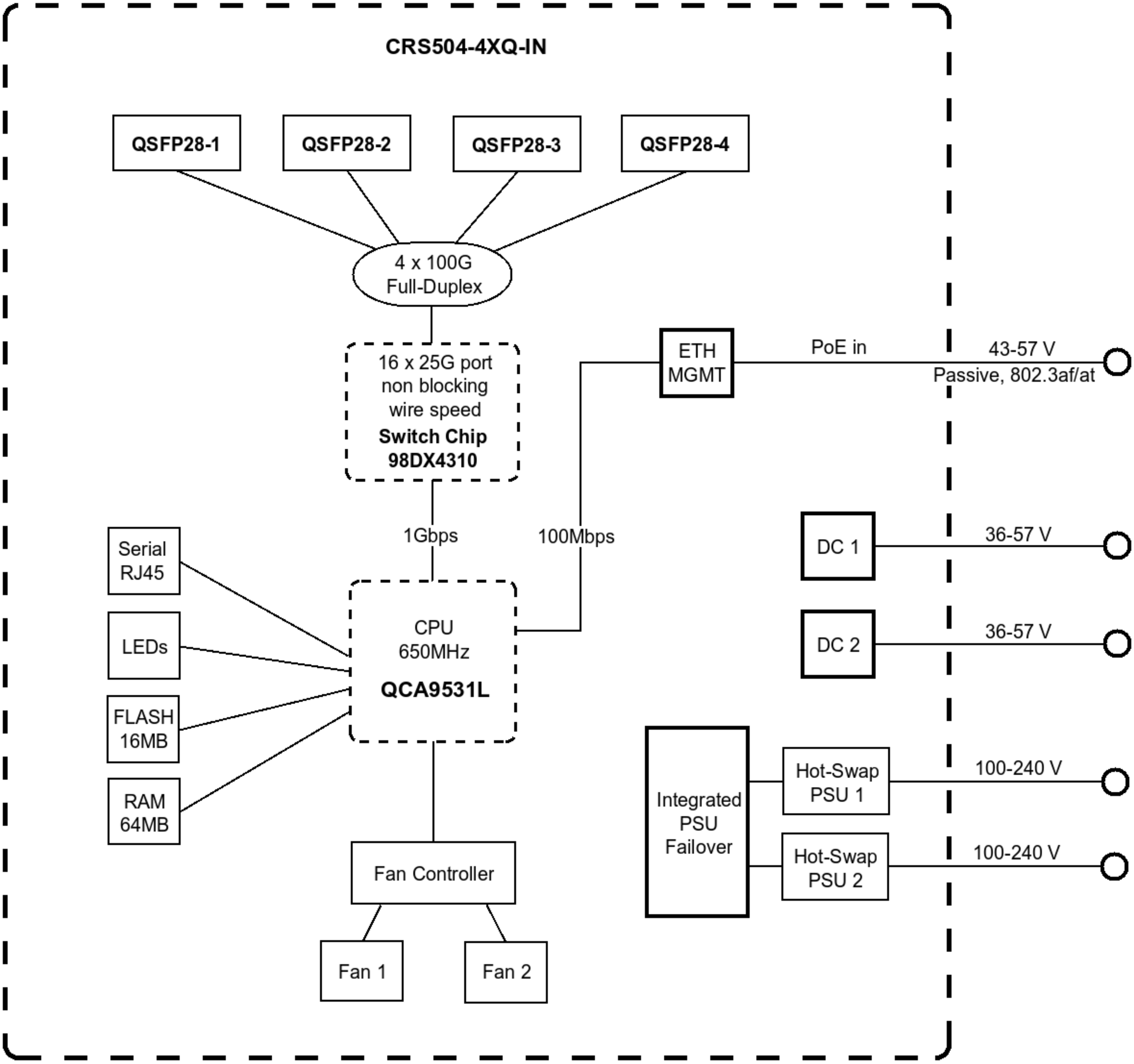
CRS504-4XQ-IN
QSFP28-1
QSFP28-2
QSFP28-3
QSFP28-4
4 x 100G
Full-Duplex
16 x 25G port
non blocking
wire speed
Switch Chip
98DX4310
ETH
MGMT
PoE in
43-57 V
Passive, 802.3af/at
1Gbps
100Mbps
Serial
RJ45
LEDs
FLASH
16MB
RAM
64MB
CPU
650MHz
QCA9531L
DC 1
36-57 V
DC 2
36-57 V
Integrated
PSU
Failover
Hot-Swap
PSU 1
100-240 V
Hot-Swap
PSU 2
100-240 V
Fan Controller
Fan 1
Fan 2